☐ After use

Storage and maintenance: when the unit is to be stored for a long period, remove the power supply and bit, open the carbon brush cover and blow out any accumulated carbon brush dust with compressed air, and wipe the exterior clean. Then store the screwdriver carefully in a dry, dust-free place away from direct sunlight. Store the bit in grease. To ensure continued serviceability, periodically check and maintain the screwdriver.

☐ Troubleshooting

If the screwdriver does not work properly, check the list below. If you cannot solve the problem do not open the unit. Contact one of our authorized agents as soon as possible.

☐ If the screwdriver does not run

- Check that the power supply is outputting power.
  - Check that the power supply plug is inserted properly and that output plug terminals No.1 (+) and NO.3 (-) show 30VDC (approximate) between them. If no output is shown, change the power supply.
  - Check for a open or short circuit in the 5p-5p cord connecting the screwdriver to the power supply. If an open or short circuit is found change the cord or plug. (use plug type 6G1001(5P))
- Check that the rotation direction switch are working properly. If no 'click' is heard when a trigger is depressed, it is not working and must be replaced. (make sure to perform this check in a quiet place)

☐ If the screwdriver is not rotating normally

- There is a protective circuit within the power supply. Power is only supplied normally from 3 to 5 seconds after current flow begins.
- If the motor only runs intermittently during 'Forward' operation, try 'Reverse' operation, or rotate the anvil 90 degrees until a 'click' is heard, then re-attempt 'Forward' operation.
- Long-term use causes the motor's commutator to wear down. In this case, it must be replaced. (this repair must be performed by one of our authorized agents)

☐ If the bit falls out easily or wobbles

- check that the bit matches our specifications. If not, change the bit to one that does.
- Check that the bit is inserted tightly into two guide channels within the anvil. If not, remove the bit and re-insert it tightly.
- If the bit tends to wobble, remove the bit, rotate it 60 or 180 degrees and re-insert it.

☐ If the screwdriver does not stop when the selected torque is reached

- An excessive torque setting can cause the screw to strip the threads, with the result that the clutch does not activate. Lower the torque to a level that does not cause stripping.
- Differences in size between the bit tip and screw slot lengths can cause slopping. Change to a suitable bit tip.
- The brake circuit may be damaged or the sensor switch may have shifted. (this repair must be performed by one of our authorized agents)

☐ Warranty

We provide a one-year free repair service warranty with this product. The warranty is good for one year from the date of purchase entered on the Product Information Form. The retailer's stamp must appear on the form to confirm the date. However, the following circumstances we will charge the user for any parts and labor cost associated with repairs.

☐ For repairs involving normal wear to parts including carbon brushes, bits and power cord, and also to the exterior surface.
☐ If the screwdriver was connected to a power source of the incorrect voltage.
☐ If there was inappropriate use or an attempt to repair the unit by the user.
☐ After the period of the guarantee, or if the user cannot present the manual with stamped Product Information Form.

Retailer's Stamp		Montion Kft. | Montion Tools E-mail: info@montion.hu asa-tool.hu | montion.hu | montiontools.com | htools.hu

◎ Specifications and design may be changed without notice for improvement(A-0)

Serial No.: _____

ASA Industrial Electric Screwdriver User's Manual

(for full-automatic models－brushless motor with controller)

☐ A Word of Thanks to Our Customers

Thank you for choosing lightweight and powerful electric screwdrivers. In order to insure maximum performance and product life, please read through this manual before using your screwdriver.

☐ Feature

☐ Adopted the high precision , low inertia and low impact driving brushless motor , long lift , high quality.
☐ Our screwdrivers are designed for use with precision torque locking screws. It can be used for assembly of small items such as mobile phone, cameras and eyeglasses, and large items such as home appliances, computers and furniture.
☐ Unneeded carbon brush replace,effective reduce the expense for business.
☐ Low vibration, low noise, meets environmental protection demands.
☐ It's motor does not generate any carbon particle over flow to reduce air pollution and protect our environment.
☐ Connecting with soft start and speed adjustable function power supply, not only match to differ fastening condition, but also keep the best fastening quality.
☐ With the most prominent gold plated micro switch (The service life of the contact point withstands 10 million on and off contacts.),to more reduce the costs of maintenance.
☐ Design features separation of screwdriver and control for low repair costs and higher serviceability rate.
☐ Switching power supply plugs directly into screwdriver and supplies stabile voltage, provides more accurate torque and longer motor life.
☐ Right-angel (90°) head adapter attaches easily to screwdriver for use in small spaces (>60mm), operates smoothly. (Optional)
☐ Ergonomically designed exterior reduces work fatigue and increases productivity.

☐ Specifications

Model		BS-2000	BS-3000	BS-4000/4000F	BS-6000	BS-6500	BS-6800
Power source		30VDC					
Torque range kgf-cm/1bf-in		0.3~2.0/ 0.26~1.7	0.5~5.0/ 0.43~4.3	1.5~12/ 1.3~10.4	2.0~16.0/ 1.7~13.9	4.0~20.0/ 3.5~17.4	5.0-25/ 4.3-21.7
No load speed rpm		700-1000	700-1000	700-1000/ 1400-2000	700-1000	700-1000	700-1000
Torque setting		Stepless					
Available Screw	Machine Screw mm / in	1.0~2.2/ 0.04~0.09	1.0~2.6/ 0.04~0.1	2.6~3.0/ 0.1~0.12	2.2~4.2/ 0.08~-0.14	2.6~4.0/ 0.1~0.16	3.0-5.0/ 0.12-0.20
	Tapping Screw mm / in	1.0~2.0/ 0.04~0.08	1.0~2.3/ 0.04~0.09	2.0~2.6/ 0.08~0.10	2.0~3.2 0.08~0.12	2.3~3.5/ 0.09~0.14	2.6-4.0/ 2.6-4.0
Weight g / 1b		412g/0.91b					
Length mm / in		227mm/8.9in					
Available bit shank		ϕ 5 or 1/4"(6.35) Hex shank					
Power consumption W		60					
Available power supply		APM-302B					
Clutch impact		Just one time when torque up					

☐ Outline (This drawing applies only to 1/4" bit shank screwdrivers)

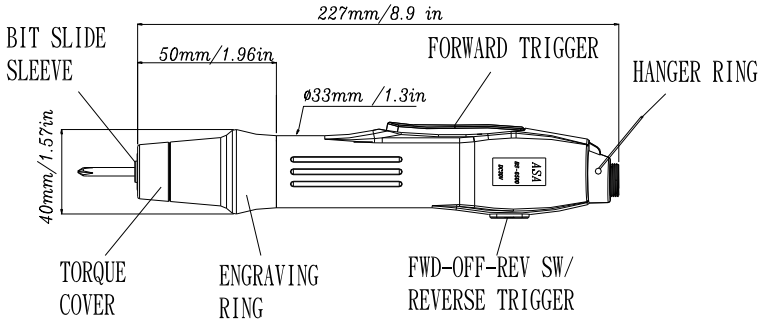

☐ Accessories

This product comes supplied with a power code and two bits.

☐ Bits (one set per screwdriver)

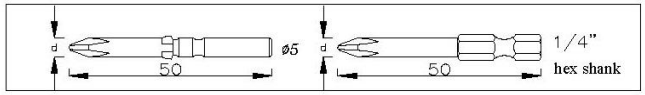

Bit specifications						Available Screwdriver Model
ϕ 5.0			1/4"			
Tip No.	Tip diameter D	P#	Tip No.	Tip diameter D	P#	
#00	ϕ 1.7	7W3204	#00	ϕ 1.7	7W6204	BS-2000
#00	ϕ 2.0	7W3404	#00	ϕ 2.0	7W6404	
#1	ϕ 3.0	7W3644	#1	ϕ 4.5	7W6744	BS-3000
#0	ϕ 2.5	7W3524	#0	ϕ 2.5	7W6524	
#1	ϕ 3.0	7W3644	#1	ϕ 3.0	7W6644	BS-4000 BS-4000F
#2	ϕ 5.0	7W3864	#2	ϕ 4.5	7W6764	
#1	ϕ 3.0	7W3644	#1	ϕ 3.0	7W6644	BS-6000
#2	ϕ 5.0	7W3864	#2	ϕ 6.0	7W6964	
#1	ϕ 3.0	7W3644	#1	ϕ 3.0	7W6644	BS-6500
#2	ϕ 5.0	7W3864	#2	ϕ 6.0	7W6964	
#1	ϕ 4.5	7W3844	#1	ϕ 4.5	7W6744	BS-6800
#2	ϕ 5.0	7W3864	#2	ϕ 6.0	7W6964	

☐ Power supply(optional)

Model	Dimension mm			Operation volt. (AC)	Output volt. (DC)	weight (g / 1b)	Approval
	L	W	H				
APM-302B	172	84	46	100-240	20-30	380/0.84	UL,CE

☐ Before use, read the following:

☐ Use the correct voltage: Carefully check the voltage shown on the power supply and this manual and determine the correct voltage. Only plug the unit into a power source of the correct voltage.

☐ Determine the appropriate torque range: choose the correct screwdriver for the torque you will require. To lengthen product life, avoid long-term high torque use.

☐ Make sure the screwdriver is undamaged: If the power code is scraped or damaged, it should be immediately unplugged and replaced to avoid electric shocks or a short circuit that could result in fire.

☐ Use in an appropriate work environment: To ensure safety, do not use in high temperature, high humidity environments or near flammable materials. Keep the power cord away from tools or equipment that might scrape or melt it.

☐ When plugging in or unplugging the power cord, hold the plug firmly. Never pull on the cord.

☐ Method of operation and important points

☐ Driving and removing screw: insert the tip of the screwdriver bit accurately into the screw slot and press down lightly. To drive a screw, depress the 'Forward' trigger. To remove a screw, depress the 'Reverse' lever. Either of these actions will automatically engage the motor. If both the 'Forward' and 'Reverse' levers are depressed at the same time, the screwdriver will not rotate. Note: During operation, do not switch quickly between rotation directions. Release one lever and wait for the motor to stop fully before depressing the other lever.

☐ Torque settings: Use the regulating handle to set the torque. Turning it in a clockwise direction into the screwdriver will increase the torque. Turning it counterclockwise out of the screwdriver will decrease the torque.
Note: The engraved markings on the engraving ring are for reference only and do not indicate torque output. Torque output can only be determined by repeated testing with a torque meter or hand-held spanner torque meter. To prevent your torque setting from being changed, we can provide a torque cover which covers and secures the regulating handle.

☐ Bit insertion: Use your finger to depress the slide sleeve into the screwdriver and insert an appropriate bit. When the slide sleeve is released, the bit will be automatically engaged.
Note: Do not hammer the bit in or pull it out forcibly.

☐ Secure screwdriver during operation: During operation, hang the screwdriver up securely (as from balancer) in order to prevent it from being knocked down and suffering external cracking, internal damage, or a snapped power cord.

☐ When the selected torque is reached: This product features an internal clutch assembly. When a screw is driven and the selected torque is reached, the clutch assembly will automatically disengage and a 'click' will be heard. At this point, even if the 'forward' trigger is not released, the power to the motor will be automatically cut off.
Note: When driving screw, grasp the screwdriver firmly in order to prevent upwards recoil generated by the clutch release from forcing the screwdriver bit edge form the screw slot and damaging slot.

☐ When removing screws: when a previously driven screw cannot be removed using the same torque that it was driven with, raise the torque setting. After the screw is removed, return the regulating handle to its original setting. To simplify this operation, note the number 'click' sounds generated as the regulating handle is turned.

☐ Operational frequency: suggest the operational frequency 1/4"(ON/OFF)second, the total screws 7000pcs/8hours, don't over our operational frequency suggest, and avoid the inside part of screwdriver serious damage. If everyday work 8hours upward, please use two screwdriver by turns, protect the life of screwdrivers.

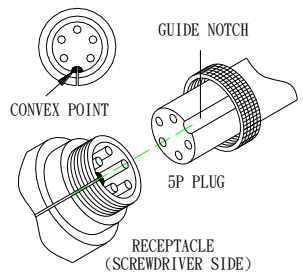

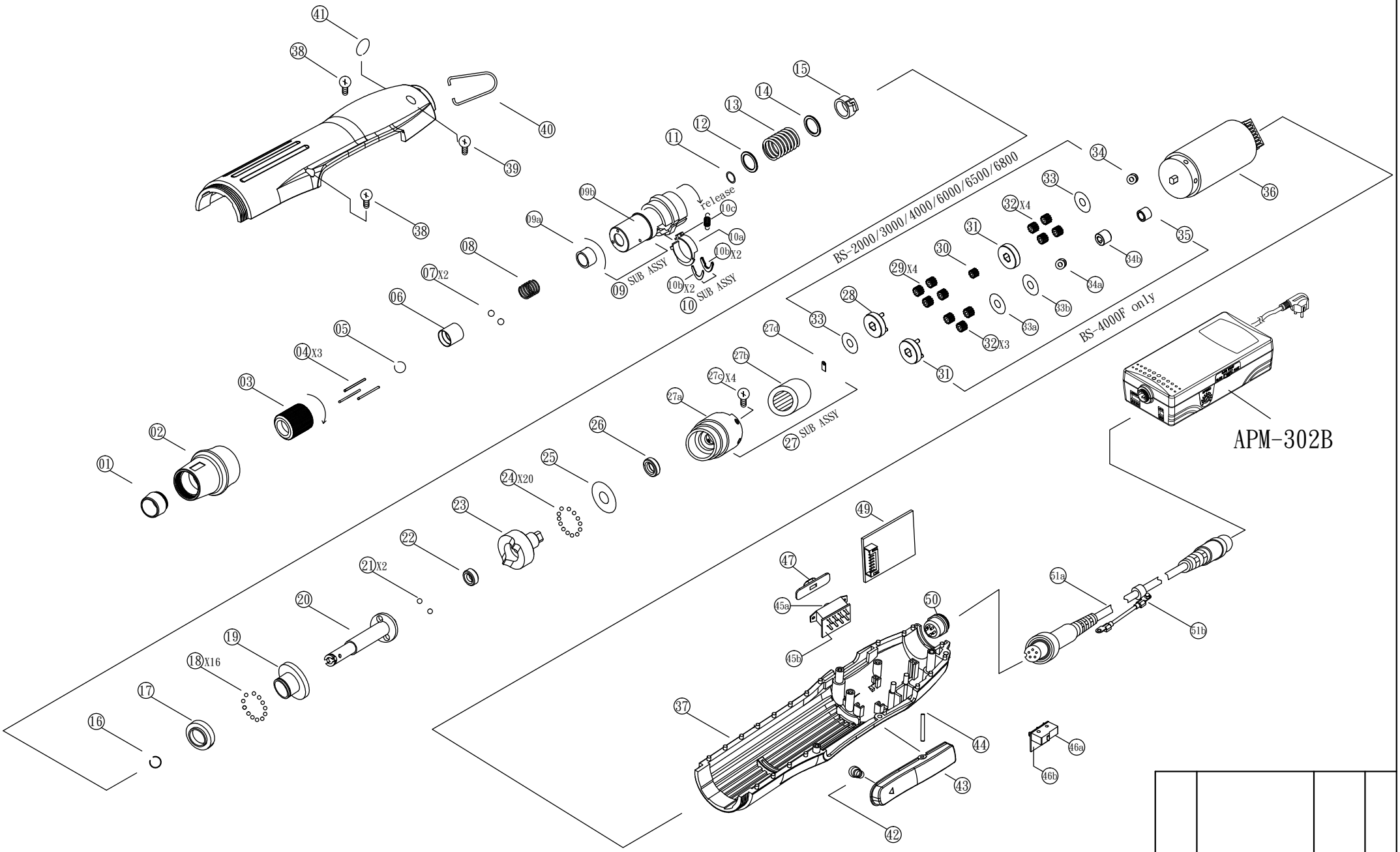

48 SUB Ass'y = 45+46+49+50

UNIT:M/M	DATE	NAME	NAME	BS-20/30/40/60/65/6800/4000F disassemble graphic
DESIGN				
DRAWN	2022/12/30	Vincent		
CHECKED			ASA	ENTERPRISE CORP. TEL:(02)2790-0535
APPROVED				

SYM.	DESCRIPTION	DATE	SIGN.
1	REVISED		

DWG. NO: M20008