Controller

Product Introductions

APM-202B

APM-302B

APM-302C

APM-352B

ASA TOOLS ENTERPRISE CORP.

Table of Content

■Special Thanks to our customer

Thank you for choosing our light and powerful electric screwdrivers. To ensure the tool fully utilizes its maximum performance and extend its life, please read this manual before use.

-Table of Content-

General Safety Warnings **02**
Read before use **04**
Declaration of Conformity CE/UKCA/Service..... **06**
Product information **07**
Operation **08**
Troubleshooting **14**
Assembly Drawing **16**
Parts List **17**

General Safety Warnings

WARNING: Read all safety warnings and instructions.

Failure to follow the warnings and instructions may result in electric shock, fire and/or serious injury.

Save all warnings and instructions for future reference.

Work area safety

- Keep work area clean and well lit. Cluttered or dark areas invite accidents.
- Do not operate power tools in explosive atmospheres, such as in the presence of flammable liquids, gases or dust. Power tools create sparks which may ignite the dust or fumes.
- Keep children and bystanders away while operating a power tool. Distractions can cause you to lose control.

Electrical safety

- Power tool plugs must match the outlet. Never modify the plug in any way. Unmodified plugs and matching outlets will reduce risk of electric shock.
- Avoid body contact with earthed or grounded surfaces, such as pipes, radiators, ranges and refrigerators. There is an increased risk of electric shock if your body is earthed or grounded.
- Do not expose power tools to rain or wet conditions. Water entering a power tool/its adaptor will increase the risk of electric shock.
- Do not abuse the cord. Never use the cord for carrying, pulling or unplugging the power tool. Keep cord away from heat, oil, sharp edges or moving parts. Damaged or entangled cords increase the risk of electric shock.
- When operating a power tool outdoors, use an extension cord suitable for outdoor use. Use of a cord suitable for outdoor use reduces the risk of electric shock.
- If operating a power tool in a damp location is unavoidable, use a residual current device (RCD) protected supply for its adaptor. Use of an RCD reduces the risk of electric shock.

Personal safety

- Stay alert, watch what you are doing and use common sense when operating a power tool. Do not use a power tool while you are tired or under the influence of drugs, alcohol or medication. A moment of inattention while operating power tools may result in serious personal injury.
- Prevent unintentional starting. Ensure the switch is in the off-position before connecting to power source and/or battery pack, picking up or carrying the tool.
- Carrying power tools with your finger on the switch or energizing power tools that have the switch on invites accidents.
- Remove any adjusting key or wrench before turning the power tool on. A wrench or a key left attached to a rotating part of the power tool may result in personal injury.
- Do not overreach. Keep proper footing and balance at all times. This enables better control of the power tool in unexpected situations.
- Dress properly. Do not wear loose clothing or jewelry. Keep your hair, clothing and gloves away from moving parts. Loose clothes, jewelry or long hair can be caught in moving parts.

■ Use and Maintenance of power tool

- Please choose proper power tool according to the fastened object. Proper selected power tool gets better efficiency.
- Do not use the power tool whenever power switch is faulty. Any power tool with faulty power switch is dangerous and must be repaired.
- Before making any adjustment, replacing parts or putting away, please unplug the power tool to ensure the safety and avoid unexpected start-up of power tool.
- Keep the idle power tool away from children, and prevent people who are not familiar with it from operation. Power tool operated by untrained users is dangerous.
- The maintenance of power tool. Please check for all the possibilities that could affect the operation of power tool. For example, uncalibrated power tool, movable parts are tied, damaged parts etc. If any damage is found, repair it before use. Please also note improper repair can lead to an accident easily.
- Keep the bits clean, and keep the bits with sharp edge, since it can get better control.
- Please follow instruction for the operation of power tool, accessories and bits. Operation failed to follow the instruction may lead to danger.

Read before use:

■Please read the following notices before use:

• **Set-up Notice**

−The controller should be used indoor and in dry place without the presence of dust and iron grindings.
−The controller should be positioned on a stable surface to avoid falling caused by vibration.
−The controller should be kept away from high voltage sources and noise generating sources to avoid electromagnetic interference.
−No objects should be placed on the top of the controller. Keep its surrounding clear to allow heat dissipation.

• **Caution during the operation:**

−Please use the power supply with AC circuit which overload relay is included.
−The plug of the power cord is attached with ground pin, which must be connected to the socket equipped with ground circuit to avoid electric shock.
−The plug of the power cord must be tightly plugged into the socket.
−For plugging and withdrawing the connecting cord between controller and screwdriver, please hold the plug, do not pull the cable to avoid short circuit of the internal wires.
−It is directional when you plug the connecting cord into the driver and the controller's socket. You have to insert it in powerfully after aligning with covex point in the socket; then twist it to fix it on the driver or the controller. Thus it will reduce the occurrence breakage of connecting cord due to drag. Use the knob to fix the cable with the controller. Please see the picture below.

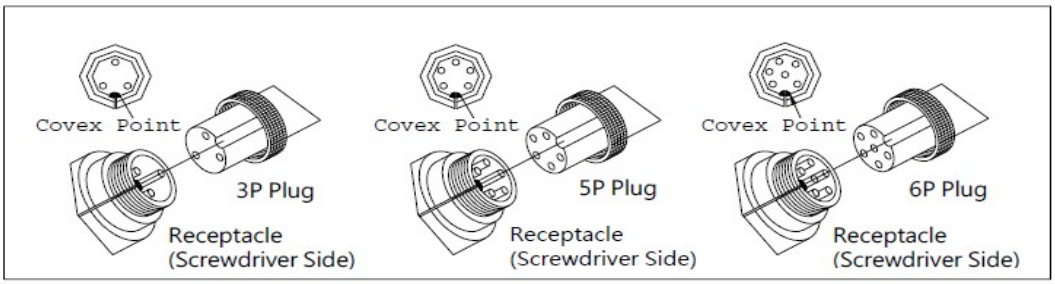

−Please do not suddenly switch between forward and reverse when the electric screwdriver is in operation.
−Please use the electric screwdriver with under 80% of the rated maximum torque to avoid inaccurate clutch escape (The rated maximum torque may vary with the flexibility of the fastened object). If you need to use over 80% of the rated maximum torque, please use the screwdriver with higher torque.

Read before use

- **Safety notice**

−If notice smog, smell anything unusual, or hear any unusual noise from the controller, please stop using to avoid any hazard. Turn off the power immediately and contact your nearest sales agent after no more smog is found.

−Keep the two-stage switch in OFF position when the controller is not in use. Pull out the plug from the power source socket when the controller is not in use for a longer period.

−Our controller is for ASA electric screwdriver use only. Do not use it with other tools to avoid any hazard.

■Declaration of Conformity CE

We (ASA TOOLS Enterprise Corporation) declare under our sole responsibility that the products controller described under this manual are in conformity with the following Directives/ or standardization documents: Low Voltage Directive 2014/35/EU and EMC Directive 2014/30/EU.

■Declaration of Conformity UKCA

We (ASA TOOLS ENTERPRISE CORPORATION) The subject equipment under declaration is in conformity with the UK-GB Regulation(s) below: Statutory Instruments 2016 No. 1091 .The Electromagnetic Compatibility Regulations 2016

■Service

Have your controller serviced by a qualified repair person using only identical replacement parts. This will ensure that the safety of the controller is maintained.

■Warranty

We offer one-year free repair service with this product. The warranty is valid for one year from the original purchasing date. Please note that this warranty policy does not cover the circumstances listed below and we will charge for repair or labor cost if necessary.

−Consumable parts: relay, Switch or brake circuit.

−Improper use of the electric screwdriver and caused internal discontinuity between two ends (5P-5P/6P-6P) of the connecting cord.

−The unit was not plugged to designated power source.

−Improper use or power supply is disassembled for maintenance without permission

−Out of the warranty period or the user cannot present the manual.

Product information

■Feature

-Universal power source: It is suitable for any power source ranges between 100-240VAC 50/60Hz.

-Stepless control: Output stepless control and constant voltage makes the assembly of light, thin, short, and small works more efficient and they are key features electron industry pursues after. The smaller the screw, the higher locking and tightening is required. With this function, it can satisfy the requirements of high precision and low inertia in both long and short screws fastening.

-Soft start: There is 0-1 sec. soft-start function inside the power supply. The speed of fastening will gradually change from slow to fast motion during the operation. This lowers the risk of screw shaking when fastening.

- With output terminal for connecting to External controller for integrated control.

-Digital identified system: When power supply connects to screwdriver and power is On, it will detect the type of screwdriver automatically.

■Specification

Model / Item	APM-202B	APM-302B	APM-302C	APM-352B
Input Voltage (VAC)	100~240V 、 50/60Hz			
Output Voltage (VDC)	9-19 V	20-30 V	20-30 V	25-35 V
Soft-start (sec)	N/A	0 – 1 sec	0 – 1 sec	0 – 1 sec
Output Voltage setting	Stepless Control			
Output Pin	5pin	5pin	6pin	5pin
Internal Signal Output	Switch-on/Brake No-Voltage contact signal (PS series is excluded)			
External Signal Output	Switch-on Signal (PS series is excluded)			
No. of Screwdriver/power supply	1 piece			
Power (W)	32.3 W	51W	51W	52.5 W
Applicable Electric Screwdriver models	ASA-S1000M/A ASA-S1000M PRO ASA-S2000M PRO BS-100	ASA-S1000M/A BS-2000 ASA-S2000M/A BS-3000 ASA-S2500M/A BS-4000 ASA-2000M/S/A BS-4000F ASA-3000M/S/A BS-6000 ASA-4000M/S/A BS-6500 ASA-7000/PS BS-6800 ASA-8000/PS BS-100F BS-200 BS-250 BS-300 BS-400	ASA-6000/PS ASA-6500/PS ASA-6800/PS ASA-7500/PS	ASA-2000/S ASA-3000/S ASA-4000/S ASA-4500/S
Dimension (mm)	172X84X46 mm			
Weight (g)	380 g			
AC cable length (M)	1.8 M			
Safety Standards	CB,CE,UL(CUL),ROHS,REACH,KC,FCC,UKCA			
Accessories	Small screwdriver, 2P/4P socket terminal 1 pieces, and AC cable			

■INSTALLATION

DC cable is required to connect between screwdriver and power supply. Please kindly note the minimum bend radius(r) of the cable is 60 mm.	While connecting DC cable between screwdriver and power supply (refer to drawing below), please align and match the covex points inside the plug of DC cable to the plugs on screwdriver/ power supply, and insert it properly. Then rotate and tighten the nut in clockwise direction.	Turn the power supply ON after screwdriver is well connected with it. The LED will flash Orange 3 times and stay in Green that is ready for operation. P.S. While LED is flashing, do not press the trigger on screwdriver.
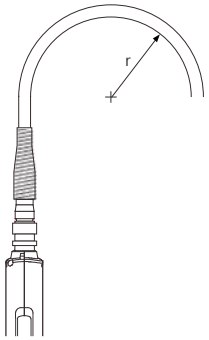 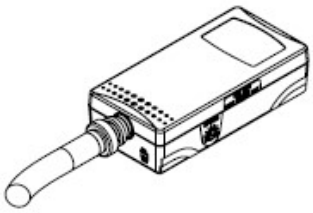	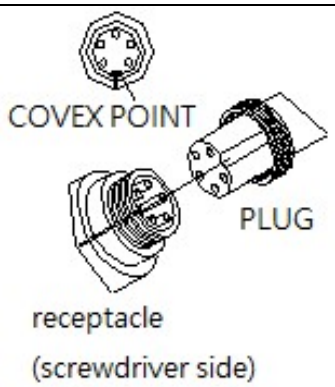	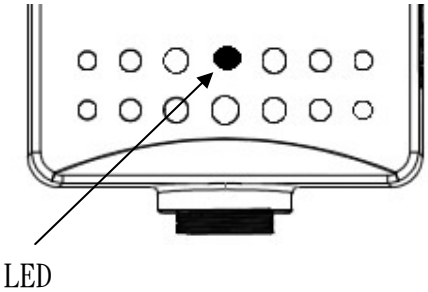

■Parts and functions

- **Speed setting**

  Turn the speed-setting screw through the hole on the side of the power supply with the small screw driver (standard accessory).

−Turn clockwise ↷ 0→10 on the scale to increase the speed.

−Turn counter-clockwise ↶ 10→0 on the scale to lower down the speed.

APM-Series

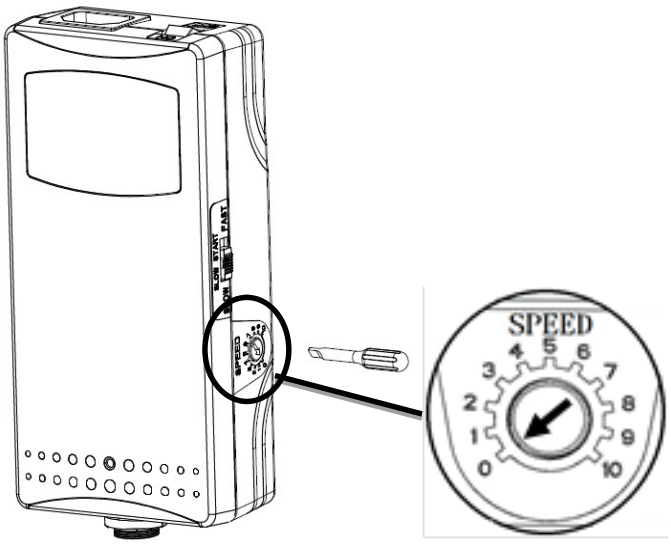

- **Soft-start setting (EXCEPT APM-202B)**

−Change the two-stage switch on the side of the power supply by hand.

−Switch to SLOW mode 0 → 1 sec. The speed gradually increases from slow to constant faster speed.

−Switch to FAST mode 0 → 0 sec. Constant speed without change.

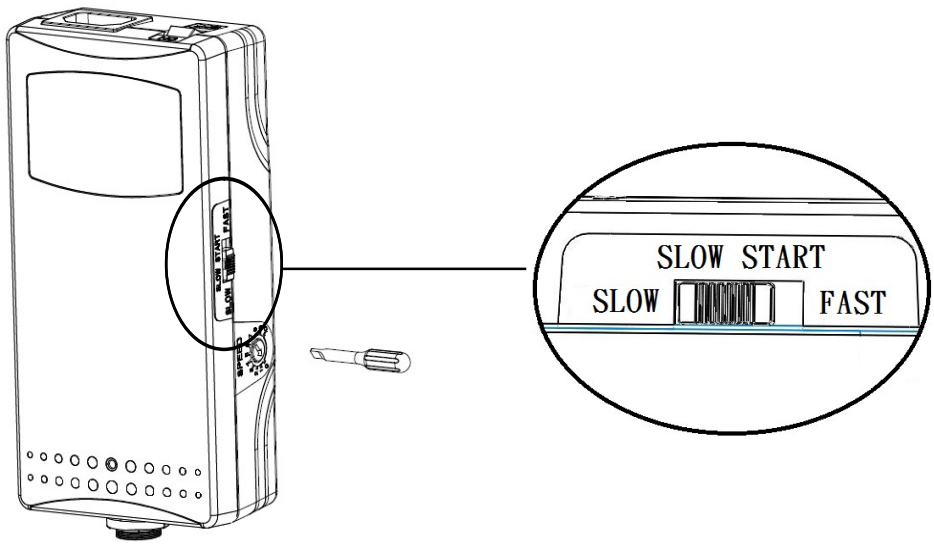

- **Power setting and AC input socket (C13 specification)**

−The input voltage of our power supply is ranged between 100-240VAC, 50/60 Hz. Please make sure you use the correct voltage to avoid any damage to the power supply.

−Connect one side of the cable to the AC power socket and the other side to the AC input socket (C13 specification).

−Change the two-stage switch at the top of the power supply by hand.

- On mode, the power supply will be switched on.
- Off mode, the power supply will be switched off.

Two-stage Switch	Top of the Power Supply	AC input socket (C13 specification)
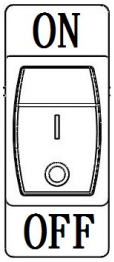	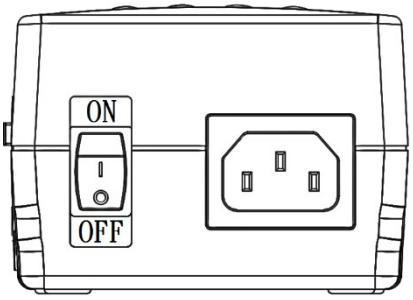	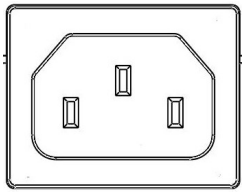

· Indicator Light

Item \ Model		APM-202B	APM-302B	APM-302C	APM-352B
Green light	After switching on, flash Orange light three times, then turn to Green light.	◎	◎	◎	◎
	Brakes				
No light	No DC voltage output	◎	◎	◎	◎
Flashing Red	Short circuit protection	◎	◎	◎	◎
	Over power protection	◎	◎	◎	◎
Red light	Brakes	◎	◎	◎	◎
Flashing Red	Heating protection (temperature set at 75~85℃)	◎	◎	◎	◎

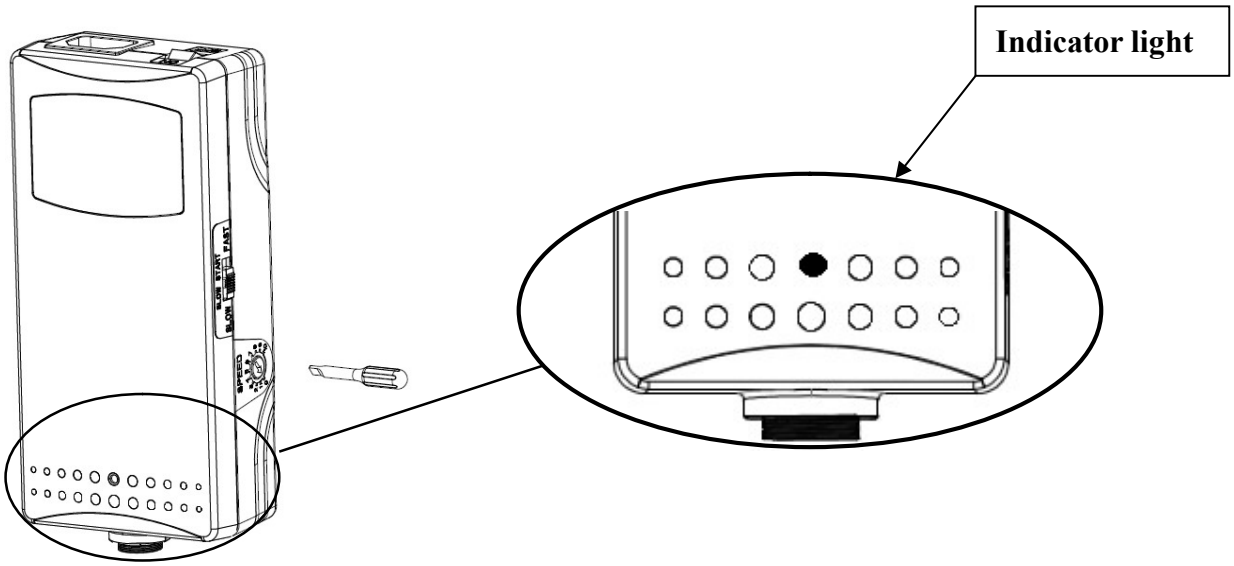

- **Output (DC) Plug**

−Provide power to the electric screwdriver.

−Plug specification

Bottom of the Power Supply	5P connection	6P connection
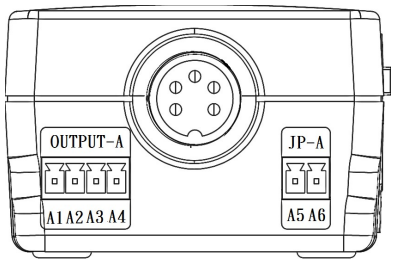	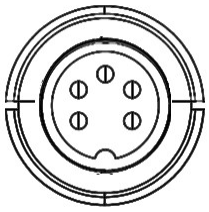	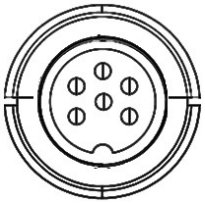

- **OUTPUT-A: Signal output terminal (see picture 1)**

−A3 & A4: Switch on signal output. A3 and A4 will export no-voltage conduct signal when the electric screwdriver switched on.

−A1 & A2: Shut-off signal output. When the electric screwdriver has reached its set torque and stopped, no-voltage signal will be exported.

Picture 1

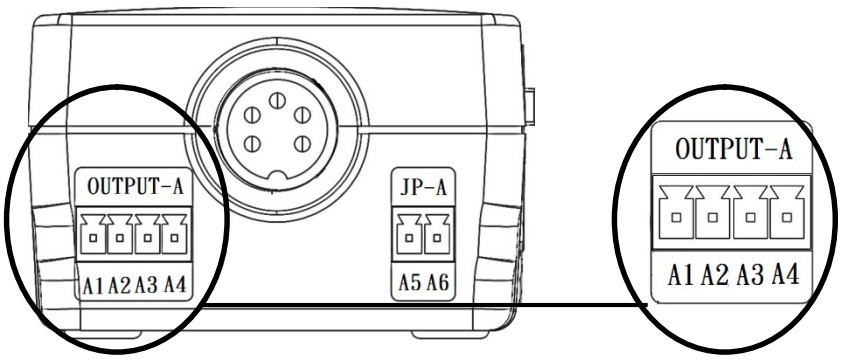

Picture2

No-voltage conduct signal

High voltage specification: DC24V/400mA

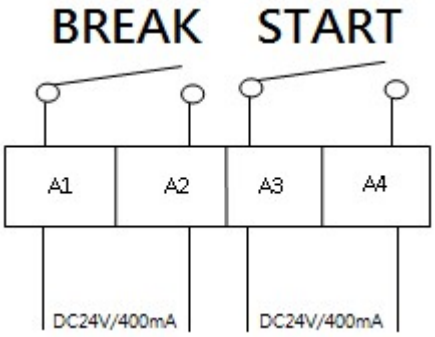

- **JP-A: Terminal for External Controller**

−A5、A6: After completing following steps, make short-circuit for A5 and A6 to trigger the electric screwdriver (forward rotation only).

STEP 1: Connect the cable to the power supply.	STEP 2: Connect the cable to the electric screwdriver.	STEP 3: Press and hold the buckle of electric screwdriver.	STEP 4: Switch the Power Supply ON, wait until LED indicator light flashes ORANGE for 3 times and turns to GREEN.
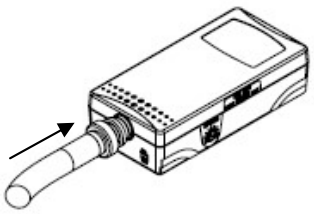	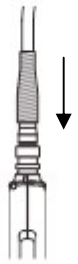	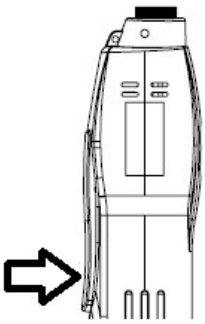	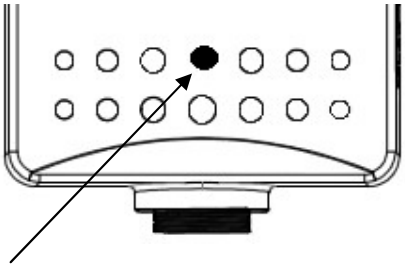

P.S:

1.STEP 3 should be omitted if brushless screwdriver or APM-302C with screwdriver is used.

2. PS series screwdrivers cannot work with automatic function.

Picture1

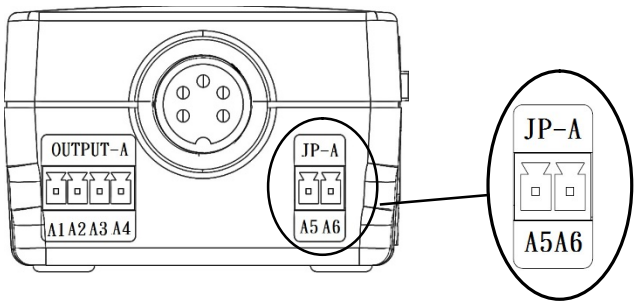

- **Screw hole for the assembly of power supply and balancer**

−There are screw holes at the bottom of power supply which you can combine the power supply with balancer (optional accessory) and the fixed board (optional accessory). Please follow the instruction below.

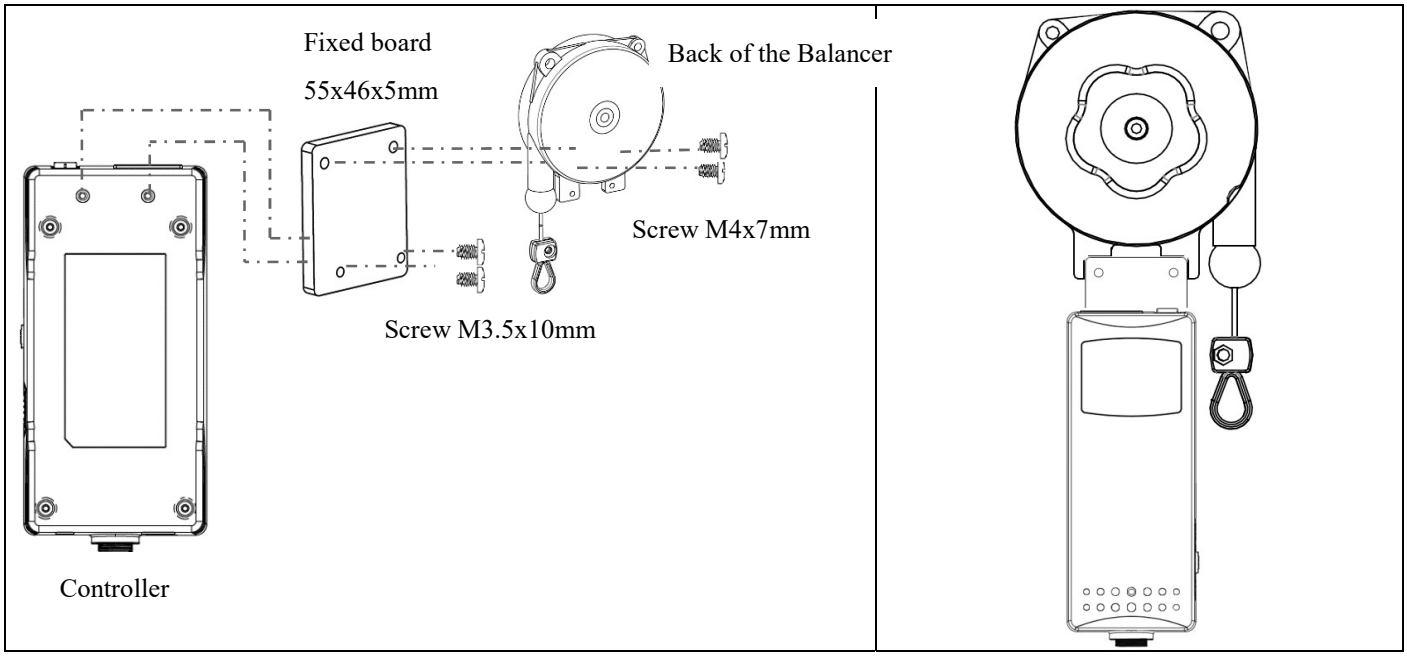

■Troubleshooting

If the screwdriver does not work properly, follow the check-list below to examine your power supply. If none of the scenarios can apply to the problem you encountered, do not open the power supply. Contact your local sales agent immediately for further guidance.

- **The screwdriver is out of operation**

−Please check the LED indicator on the power supply

−Please check whether the power plug is correctly and firmly plugged into the designated power source.

−Please check whether there is designated DC voltage between 5P-5P or 6P-6P terminal block needle NO: 1“-” potential, NO. 4“+” potential.

−Caution: If the screwdriver is 6-pin output in design, needle No. 3 and NO. 5 should be short-circuit first to trigger the relay inside the screwdriver, and then you are able to measure the output voltage.

−Please check whether the connection cable plug of 5P-5P and 6P-6P was short-circuited. If yes, please replace it with a new connection cable or a new plug. (This problem occurs more at the end of the plug connecting to screwdriver.)

- **The screwdriver keeps rotating**

−APM series: The power supply is designed with electric braking system. If you notice this problem, please contact your sales agent.

- **The screwdriver did not stop automatically when the clutch shut off at preset torque (Except reversed rotating)**

−APM series: Turn the power supply off and make sure LED is off. Follow the instruction below and connect the DC cable again.

DC cable is required to connect between screwdriver and power supply. Please kindly note the minimum bend radius(r) of the cable is 60 mm.		While connecting DC cable between screwdriver and power supply (refer to drawing below), please align and match the covex points inside the plug of DC cable to the plugs on screwdriver/ power supply, and insert it properly. Then rotate and tighten the nut in clockwise direction.	Turn the power supply ON after screwdriver is well connected with it. The LED will flash Orange 3 times and stay in Green that is ready for operation. P.S. While LED is flashing, do not press the trigger on screwdriver.
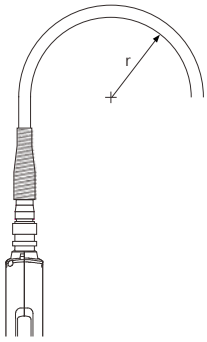	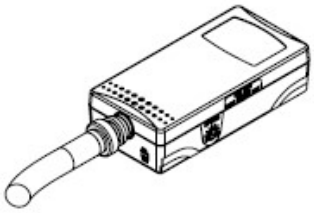	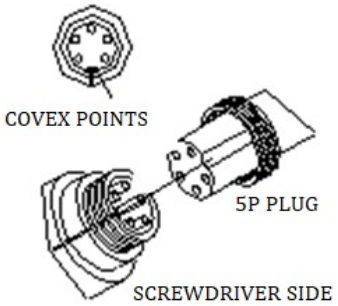	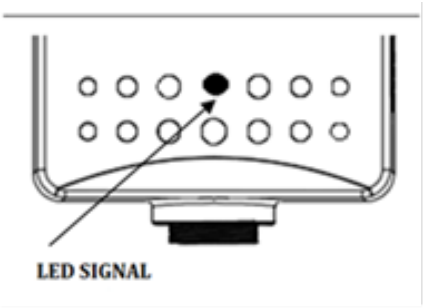

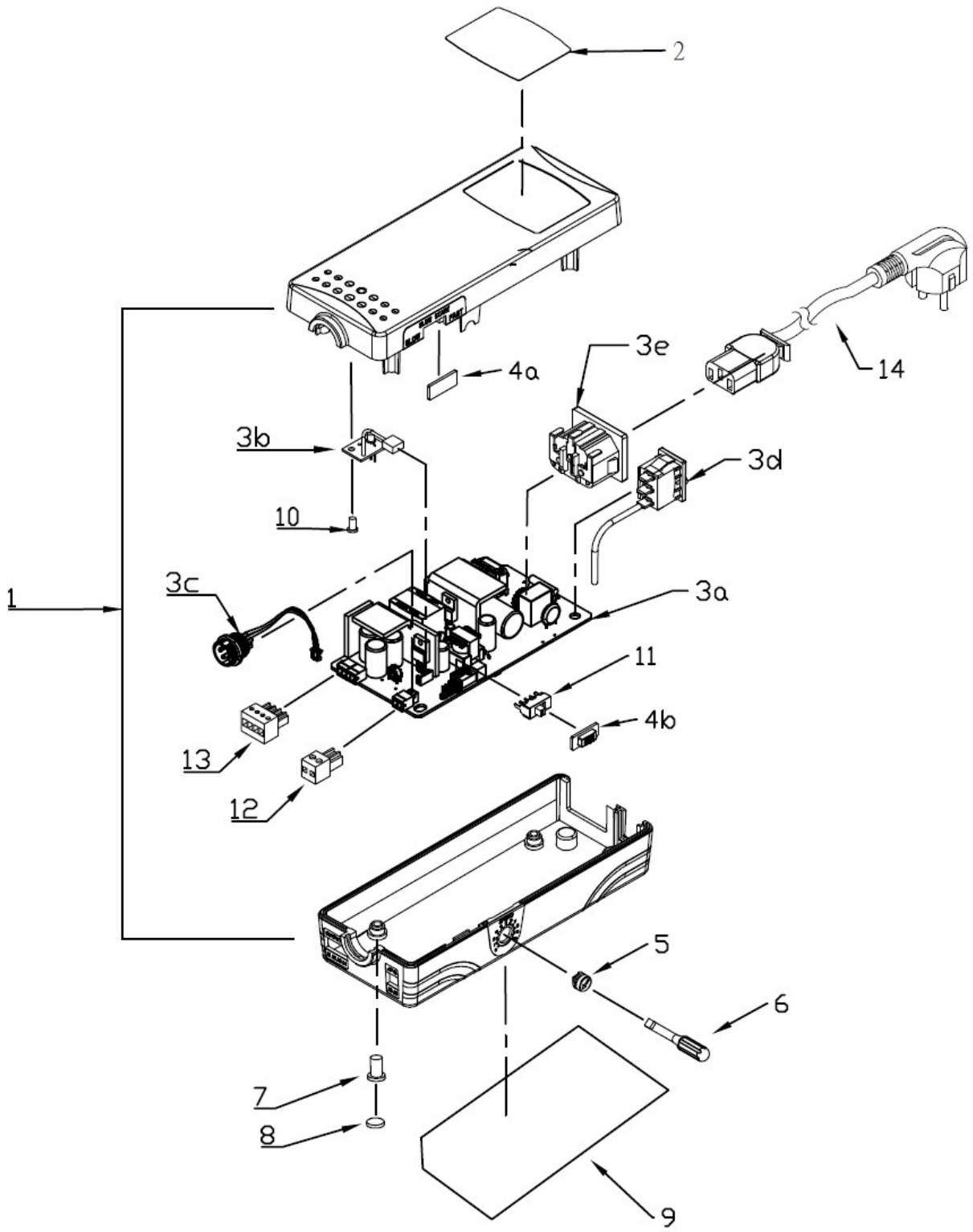
2
4a
3e
14
3b
3d
10
1
3c
3a
11
4b
13
12
5
6
7
8
9

Parts List

No.	PART NO.	ITEM	DESCRIPTION	AVAILABLE MODEL
1	6Z2072-1	PLASTIC HOUSING	UPPER COVER	**APM series**
	6Z2074-1	PLASTIC HOUSING	LOWER COVER	**APM series**
2	7L1920	MODEL LABEL	APM-202B	**APM series**
	7L1921		APM-302B	
	7L1922		APM-302C	
	7L1923		APM-352B	
3	2A2980	PCB SUB ASS'Y		**APM-202B**
3a	2A2980-MP	PCB SUB ASS'Y		
3b	2A2980-LP	LED PCB SUB ASS'Y		
3c	6G1001	PLASTIC PLUG	5PIN	
3d	2S2039	ON/OFF SWITCH		
3e	2G4011	AC INLET		
3	2A2981	PCB SUB ASS'Y		**APM-302B**
3a	2A2981-MP	PCB SUB ASS'Y		
3b	2A2980-LP	LED PCB SUB ASS'Y		
3c	6G1001	PLASTIC PLUG	5PIN	
3d	2S2039	ON/OFF SWITCH		
3e	2G4011	AC INLET		
3	2A2982	PCB SUB ASS'Y		**APM-302C**
3a	2A2982-MP	PCB SUB ASS'Y		
3b	2A2982-LP	LED PCB SUB ASS'Y		
3c	6G1002	PLASTIC PLUG	6PIN	
3d	2S2039	ON/OFF SWITCH		
3e	2G4011	AC INLET		
3	2A2983	PCB SUB ASS'Y		**APM-352B**
3a	2A2983-MP	PCB SUB ASS'Y		
3b	2A2980-LP	LED PCB SUB ASS'Y		
3c	6G1001	PLASTIC PLUG	5PIN	
3d	2S2039	ON/OFF SWITCH		
3e	2G4011	AC INLET		
4a	6V1064-1	SCREEN	**No Soft-start function**	**APM-202B**
4b	6V1063-1	PUSH BUTTON	**Soft-start function**	**APM-302B / APM-302C / APM-352B**
5	6R3016-1	ADJUSTMENT BUTTOM		**APM series**
6	6R3017	PLASTIC SCREWDRIVER		
7	8T2090	SCREW	M3*L:16	

No.	PART NO.	ITEM	DESCRIPTION	AVAILABLE MODEL
8	6B3020	FOOT	Ø6.5*3.0	APM series
9	7L1930	SAFETY LABEL	APM-202B	
	7L1931	SAFETY LABEL	APM-302B	
	7L1932	SAFETY LABEL	APM-302C	
	7L1933	SAFETY LABEL	APM-352B	
10	8T2663	SCREW	M2.5*L:6	
11	2A7092	SWITCH SUB ASS'Y		APM series
12	2T6011	Terminal Block	2P	APM series
13	2T6012	Terminal Block	4P	
14	2W1024	AC CABLE	USA TYPE	
	2W1064	AC CABLE	EUROPE TYPE	
	2W1043	AC CABLE	U.K. TYPE	
	2W1048	AC CABLE	U.K WITH FUSE TYPE	
	2W1054	AC CABLE	AUSTRALIA TYPE	
	2W1142	AC CABLE	AUSTRALIA TYPE-3C TYPE	
	2W1075	AC CABLE	BIG SOUTH AFRICA TYPE	
	2W1074	AC CABLE	SMALL SOUTH AFRICA TYPE	
	2W1245	AC CABLE	BRAZIL TYPE	

Enjoying in Technique of Assemblies

Retailer's Stamp	Mention Kft. | Mention Tools E-mail: info@mention.hu asa-tool.hu | mention.hu | mentiontools.com | htools.hu	Attention! The generic or unsuitable parts might seriously affect the power supply's lifespan, please purchase the parts from original manufacturer to secure your rights.

2023.A.1
P#:7S1040